Yealink VB-TabletopMount-01 Datasheet

Introduction

It is used to mount the device on the tabletop.



Specification

Parameter	Description
Physical Feature	Dimension (W* D* H): 249*107*116mm Carton Meas: 469*293*320mm N.W/CTN: 5.598kg G.W/CTN: 6.192kg

Device Compatibility

For more information about mounts compatibility lists, refer to Mounts Compatibility Lists.

Package Contents

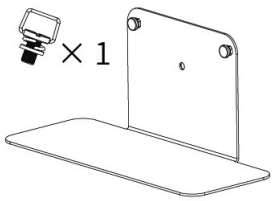



Installation

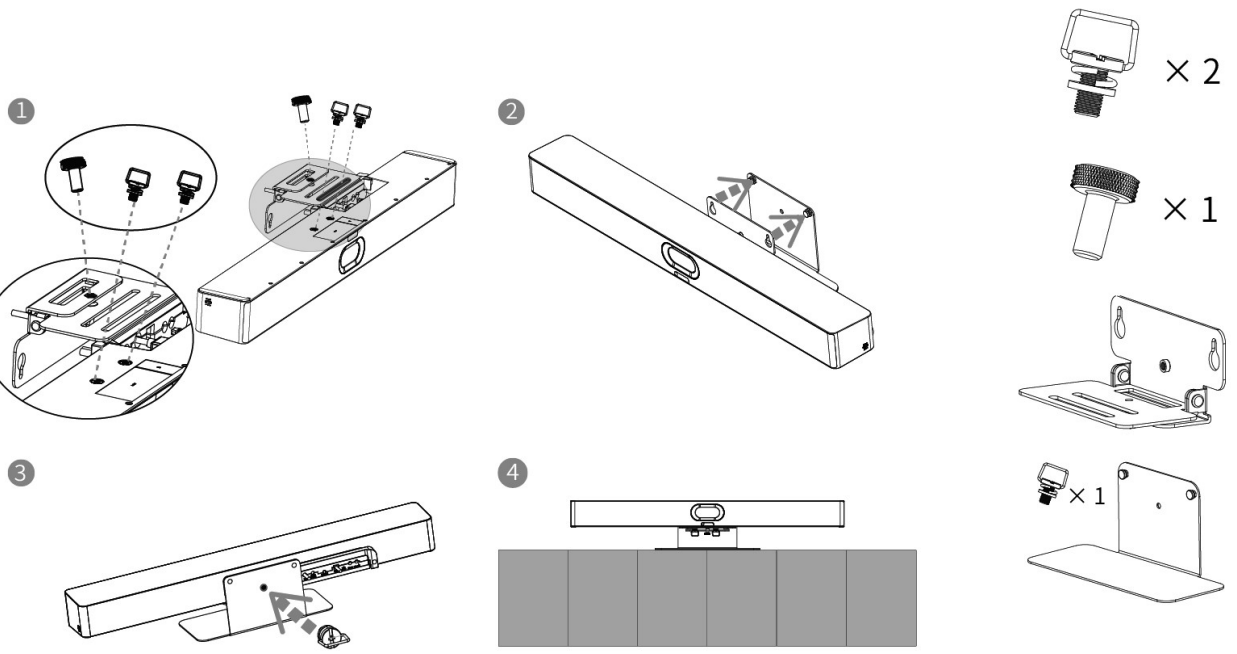

The first three components are included in the host package.